SkyTech
Tech Driven

SOLUTION FOR PRECISION MANUFACTURING COMPONENTS

BUSINESS LOCATIONS

- Singapore
- Indonesia
- India

COPY

ABOUT US

SkyTech Engineering is a highly versatile company specializing in precision manufacturing using advanced CNC machines for Medical, Aerospace, Semiconductor, Electronics, Automotive, Transportation, Optical, Oil & Gas, Offshore, Energy Marine Industry etc...

SkyTech Engineering has been incorporated in singapore since 2012 with workforce consist of 5 staffs. Since established its position within the industry for producing a wide range of components to a high degree of precision spare parts and components often manufactured from exotic and special to machine materials.

The niche area of SkyTech Engineering is capable of producing small to medium sized intricate and high precision components to cater or our customer's needs and requirements.

COPY

SAMPLE

MACHINING PARTS

COPY

CNC TURNING

CNC MILLING

WIRECUT MACHINE

EDM MACHINE

All these years, We have been growing continuously, with the effort from the employees and support from our customers. We are continuously to upgrade our facilities, product quality and produtivity year by year from a small start up company which only had 1 CNC Milling & 2 conventional machines to the Current Facility of 50 plus CNC machines and 10 more than conventional machines.

With the continuous improvements and up to date technology transfer, We are able to meet the challenges in the buisness of precision engineering and metal machining industry. We are a team of people that you can count on as a strategic Partner. Our priority is helping our customer in solving problem and growing together with cost effective our clients.

We Always Believe that "Customer Requirements and satisfaction is Our Utmost Priority"

COPY

MACHINE CAPABILITY

CNC MACHINES

MACHINE	QTY	CHUCK SIZE RANGE	LENGTH	HEIGHT
TURNING	20	CHUCK SIZE : 6"-24"	80"	
MILLING	18	X - 1500 MM Y - 700 MM		800MM
TURNMILL	04	CHUCK SIZE 4"-10"	20"	
VTL	01	CHUCK SIZE : 24"		600MM
WIRECUTTING	08	X - 500 MM Y - 400 MM		300 MM
SUPER DRILL	02	X - 350 MM Y - 250 MM		250 MM

COPY

CONVENTIONAL MACHINES

MACHINE	QTY	CHUCK SIZE RANGE	LENGTH	HEIGHT
TURNING	04	DIA 610	1500 MM	
MILLING	04	X - 600 MM Y - 300 MM		1000 MM
AUTO SAWING	04	DIA 450 MM		
SURFACE GRINDING	02	X - 350 MM Y - 250 MM	100 MM	

MISSION VISION

SkyTech
Tech Driven

VISION :

To be a globally-recognized industry leader in the manufacturing of complex Precision Engineering parts and components.

MISSION :

☑ Our mission is to plan and produce quality parts & components with lean methodology.

☑ To deliver top quality products On time with competitive price through long term global partnership in achieving total customer satisfaction.

☑ Encouraging and excellence our work force through Motivation,Training,Education & allowing all employees to participate & develop professionally.

COPY

7 CORE VALUES

★ **QUALITY:**
Delivering products and services of the highest quality.

★ **INNOVATION:**
Encouraging creativity and new ideas to drive progress.

★ **SAFETY:**
Prioritizing the health and safety of employees and customers.

★ **Trust:**
Building and maintaining trust with stakeholders.

★ **CUSTOMER FOCUS:**
Prioritizing customer needs and striving for their satisfaction.

★ **CONTINUOUS IMPROVEMENT:**
Always seeking ways to improve processes and skills.

★ **SUSTAINABILITY:**
Promoting environmentally friendly practices and long-term ecological balance.

ORGANIZATION CHART

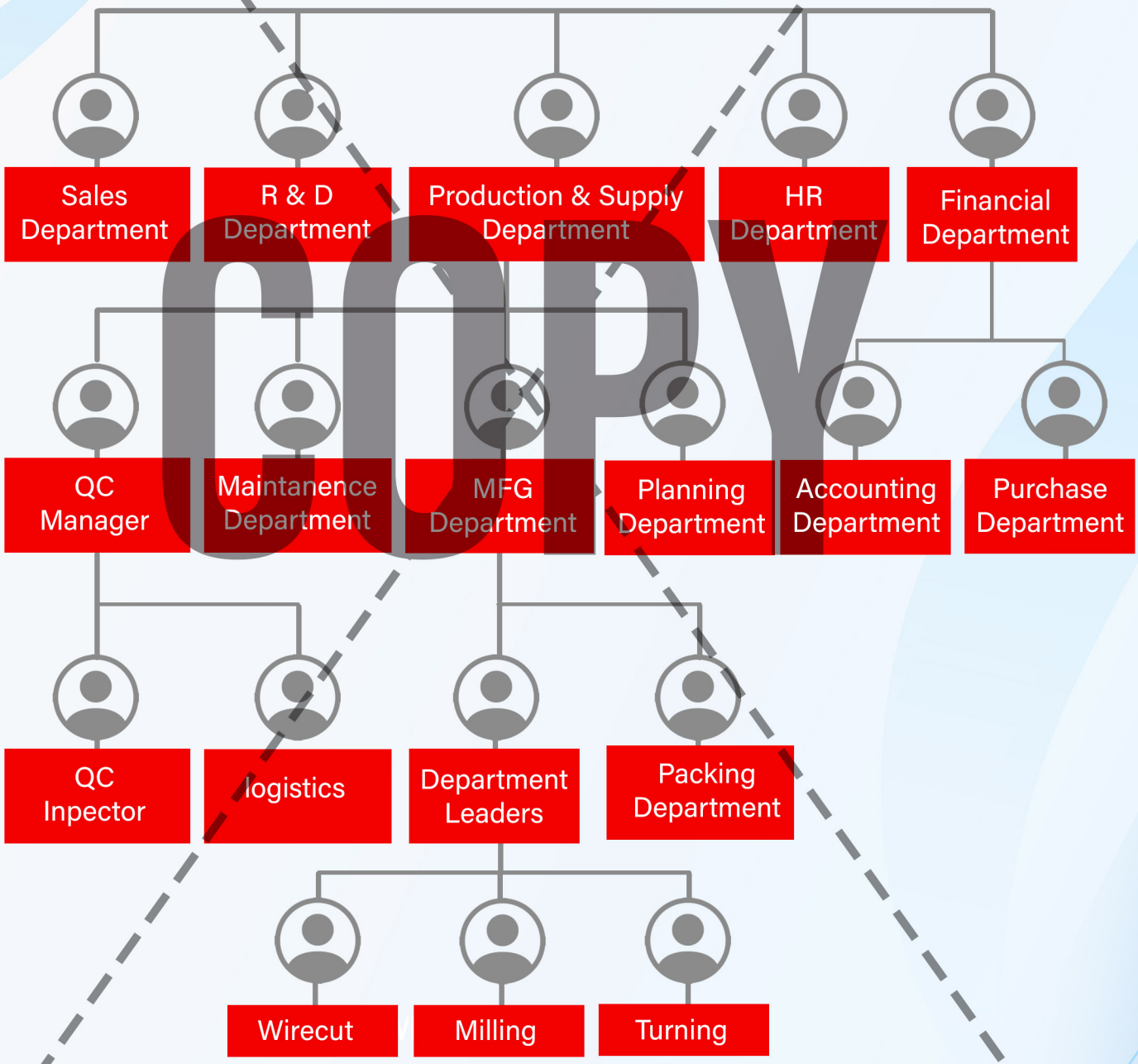

COPY

INDUSTRY SECTORS

AEROSPACE

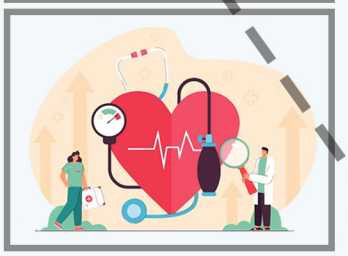

MEDICAL

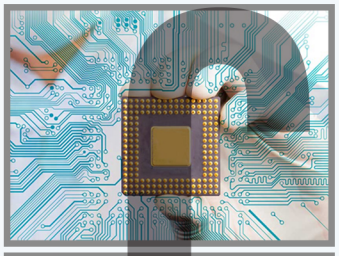

SEMICONDUCTOR INDUSTRY

AUTOMOTIVE

ELECTRONICS

OIL & GAS

MARINE & OTHERS.

COPY

PROCESS/ SERVICES

- CNC Turning
- CNC Milling
- CNC Turn-mill
- CNC VTL
- CNC Wire-cut
- CNC Edm
- Super Drill-Edm
- Surface Grinding
- Cylindrical Grinding
- Honing & Lapping
- Precision Welding
- Secondary Operations
- Sand Blasting & Painting
- Precision Machining Of complex parts
- Metal Fabrication Works
- Design & manufacturing of Jig & fixtures
- Co-ordinate Measuring Machine(CMM)
- Quality Control Report
- Non-Destructive test
- QPQ Process
- Heat Treatment & Coating
- Hardness Testing
- Turnkey Projects
- Surface Finish Testing
- Sourcing of all Engineering Industry needs

COPY

RAW MATERIAL EXPERTISE

- Carbon Steels
- Low Temperature Carbon Steels
- Martensitic Stainless Steels
- Austenitic Stainless Steels
- Austenitic -Ferritic Stainless Steels
- Super Austenitic Stainless Steels
- Inconel Alloys
- Nickel-Based Alloys
- Heat Resistant Alloys
- Aircraft light alloys
- Engineering plastics
- Brass and bronze
- Aluminium
- Monel Alloys

ACHIEVEMENTS

ISO AS9100D
SINGAPORE SME TOP 100 AWARD-2022
ISO 13485:2016
BIZ SAFE LEVEL3

Certificate of Registration

This certificate has been awarded to

Skytech Engineering (S) Pte Ltd

69B Tuas South Avenue 1, Seatown Industrial Centre, Singapore 637501, Singapore

AS 9100D & ISO 9001:2015

The scope of activities covered by this certificate is defined below

Manufacturing and Metal CNC Machining of Precision Engineering Parts and Components such as Gears, Shafts, Pistons and Cylinders

bizSAFE

CERTIFICATE

The Workplace Safety and Health Council
is pleased to certify that

SKYTECH ENGINEERING (S) PTE. LTD.

has fulfilled the requirements to attain bizSAFE Level 3

This certificate is valid till 07/01/2027

Christopher Koh
General Manager
Workplace Safety and Health Council

SME 100
Award 2022

THIS CERTIFICATE IS PROUDLY PRESENTED TO

SkyTech
Tech Driven

This certification is awarded for achieving operational integrity, outstanding accomplishment and peformance in the business

3rd JUNE 2022
DATE

Certificate number:
SMEA22-B37-0012H

COPY

QUALITY :

At SkyTech Engineering we are dedicated to total quality control throughout the manufacturing process to fulfill our Customer satisfaction, by delivering the components on time, with utmost quality & strict compliance to drawings including BOM, FAI, Quality Reports, Tracebility Records and purchase requirements accompained by correct documentations.

QUALITY POLICY :

- To meet and exceed our customer requirements by delivering products on-time with highest quality

- Strict compliance with safety and regulatory requirements

- Continuous improvement on QMS

COPY

QUALITY OBJECTIVES :

The quality objectives is to transform from quality policy into the functional levels against company performance, continuous improvements and effectiveness of QMS.

INSPECTION FACILITIES

The controlled environment inspection room at SkyTech Engineering uses both modern and traditional inspection techniques to suit each type of component produced and more importantly to verify that various measurements are correct.

ROUGHNESS METER

Brand : Mitutoyo
Model : SJ210
Accuracy : ±0.06Ra

CMM

Brand : Mitutoyo
Model : M574
Range : 500 x 700 x 400
Accuracy : ± 0.0005mm

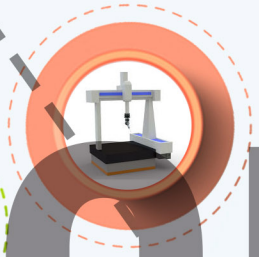

PROFILE PROJECTOR

Brand : Dyna scan
Model : PH 400
Range : 300 x 100
Accuracy : ± 0.002mm

HEIGHT GAUGE

Brand : Trimos
Model : V5
Range : 0-700
Accuracy : ± 0.0025 mm

DIAL PD GAUGE

Brand : Gauge Maker
Range : (0-6") (6-24")
Accuracy : ± 0.00003 inch

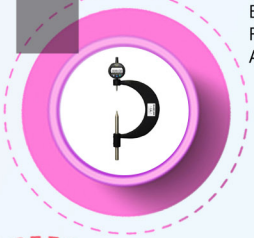

ROCKWELL TESTER

Brand : SHR-1500E
Range : 0-100 (HRC,HRB,HRA)
Accuracy : ± 0.5 Hrc

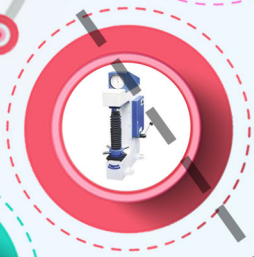

VMM

Model : EV3020
Measuring range (mm): 250x150x150
Accuracy : ± 0.002 mm

BRINELL

Brand : Kings Hardness
Range: 16-650 HBW
Accuracy of test force : ± 1% Hbw

MICROMETER

Brand : Mitutuyo
Range: 0-500mm
Accuracy of test force : ± 0.001mm

COPY

TRAINING

SkyTech Engineering provides quality, consistent and accessible training for employees and the courses are designed to help individuals and company to meet their goals by enabling them to be on the cutting edge of continuously technology.

HEALTH AND SAFETY POLICY

COPY

SkyTech Engineering is committed to the safety of Employee's, General Public and Environmental.

We recognize that providing training and integrating in a safe Environmental, health and safety programs in our company is key to our success.

We believe of Employee's safety and protecting the Environment enhancing good business and that all work-related injuries, illnesses, property losses and adverse Environmental impacts are preventable.

OUR MACHINERIES

CNC TURNING-20 MACHINES

	Brand : CAMPRO Model : CPL-3520	Qty : 1 Chuck Dia : 610mm	X-Axis : 700mm Z-Axis : 2000mm
	Brand : CAMPRO Model : CPL-30X	Qty : 3 Chuck Dia : 400mm	X-Axis : 450mm Z-Axis : 700mm
	Brand : CAMPRO Model : CPL-3510	Qty : 4 Chuck Dia : 250mm	X-Axis : 350mm Z-Axis : 650mm
	Brand : TAKISAWA Model : EX-122	Qty : 1 Chuck Dia : 610mm	X-Axis : 700mm Z-Axis : 1500mm
	Brand : TAKISAWA Model : TX-50C	Qty : 1 Chuck Dia : 400mm	X-Axis : 550mm Z-Axis : 800mm
	Brand : TAKISAWA Model : NEX-108	Qty : 1 Chuck Dia : 210mm	X-Axis : 180mm Z-Axis : 530mm
	Brand : MORI SEIKI Model : SL35	Qty : 1 Chuck Dia : 380mm	X-Axis : 420mm Z-Axis : 900mm
	Brand : LEADWELL Model : T-7	Qty : 1 Chuck Dia : 200mm	X-Axis : 300mm Z-Axis : 600mm
	Brand : FEMCO Model : HL-25	Qty : 2 Chuck Dia : 200mm	X-Axis : 300mm Z-Axis : 500mm
	Brand : MAZAK Model : Quick Turn 20	Qty : 1 Chuck Dia : 200mm	X-Axis : 250mm Z-Axis : 500mm
	Brand : LEADWELL Model : LTC-20B	Qty : 1 Chuck Dia : 200mm	X-Axis : 300mm Z-Axis : 500mm
	Brand : GOOD WAY Model : GS4300	Qty : 1 Chuck Dia : 610	X-Axis : 700mm Z-Axis : 2000mm
	Brand : EVEROX Model : DL-720X1100	Qty : 1 Chuck Dia : 400mm	X-Axis : 500mm Z-Axis : 700mm
	Brand : HWACHEON Model : HI TECH 400	Qty : 1 Chuck Dia : 300	X-Axis : 380mm Z-Axis : 750mm

CNC TURNMILL - 04 MACHINES

	Brand : MAZAK Model : QT SMART 150MS	Qty : 1 Chuck Dia : 330mm	X-Axis : 20mm Y-Axis : 60mm	Z-Axis : 336mm
	Brand : GOODWAY Model : GS-4000L2Y	Qty : 1 Chuck Dia : 600mm	X-Axis : 460mm Y-Axis : 120mm	Z-Axis : 2400mm
	Brand : ACCUWAY Model : UT-300	Qty : 2 Chuck Dia : 390mm	X-Axis : 250mm Y-Axis : 500mm	Z-Axis : 750mm

COPY

OUR MACHINERIES

CNC MILLING - 18 MACHINES

	Brand : HURCO Model : VM20	Qty : 2 NO OF AXIS : 4 AXIS	X-Axis : 1016mm Y-Axis : 508mm	Z-Axis : 508mm
	Brand : HURCO Model : VM20	Qty : 1 NO OF AXIS : 3 AXIS	X-Axis : 1016mm Y-Axis : 508mm	Z-Axis : 508mm
	Brand : HURCO Model : VM24	Qty : 2 NO OF AXIS : 3 AXIS	X-Axis : 1400mm Y-Axis : 650mm	Z-Axis : 610mm
	Brand : LITZ Model : MV-1400A	Qty : 1 NO OF AXIS : 4 AXIS	X-Axis : 800mm Y-Axis : 500mm	Z-Axis : 675mm
	Brand : LITZ Model : DV-800	Qty : 2 NO OF AXIS : 3 AXIS	X-Axis : 1500mm Y-Axis : 700mm	Z-Axis : 540mm
	Brand : YAMARIS Model : YMC-1568L	Qty : 1 NO OF AXIS : 4 AXIS	X-Axis : 1100mm Y-Axis : 610mm	Z-Axis : 800mm
	Brand : FEELER Model : NBP-1100A	Qty : 1 NO OF AXIS : 4 AXIS	X-Axis : 850mm Y-Axis : 500mm	Z-Axis : 610mm
	Brand : PINNACLE Model : VMC850S	Qty : 1 NO OF AXIS : 4 AXIS	X-Axis : 700mm Y-Axis : 2000mm	Z-Axis : 50mm
	Brand : WELE Model : AA1165	Qty : 1 NO OF AXIS : 3 AXIS	X-Axis : 1050mm Y-Axis : 640mm	Z-Axis : 580mm
	Brand : FOCASEIKI Model : PM-860	Qty : 1 NO OF AXIS : 3 AXIS	X-Axis : 860mm Y-Axis : 600mm	Z-Axis : 600mm
	Brand : SISTER Model : SV8H	Qty : 1 NO OF AXIS : 3 AXIS	X-Axis : 850mm Y-Axis : 500mm	Z-Axis : 500mm
	Brand : EQUITOP Model : EMV 600	Qty : 4 NO OF AXIS : 3 AXIS	X-Axis : 600mm Y-Axis : 460mm	Z-Axis : 480mm

CNC WIRECUT - 8 MACHINES

	Brand : SODIC Model : VL400Q	Qty : 1 X-AXIS: 400mm	Y-Axis : 300mm Height : 220mm
	Brand : SODIC Model : VL300L	Qty : 1 X-AXIS: 350mm	Y-Axis : 250mm Height : 220mm
	Brand : EXCETEK Model : V-500	Qty : 1 X-AXIS: 500mm	Y-Axis : 300mm Height : 250mm
	Brand : EXCETEK Model : V-350	Qty : 1 X-AXIS: 350mm	Y-Axis : 250mm Height : 220mm
	Brand : MITSUBISHI Model : FX-1	Qty : 1 X-AXIS: 350mm	Y-Axis : 250mm Height : 220mm
	Brand : CREATOR Model : CR-6C	Qty : 1 X-AXIS: 400mm	Y-Axis : 300mm Height : 220mm
	Brand : KOJIN Model : JS-3C	Qty : 1 X-AXIS: 350mm	Y-Axis : 250mm Height : 220mm
	Brand : ICHI SEIKI Model : CM500	Qty : 1 X-AXIS: 300mm	Y-Axis : 250mm Height : 180mm

COPY

SAMPLE MACHINING PARTS

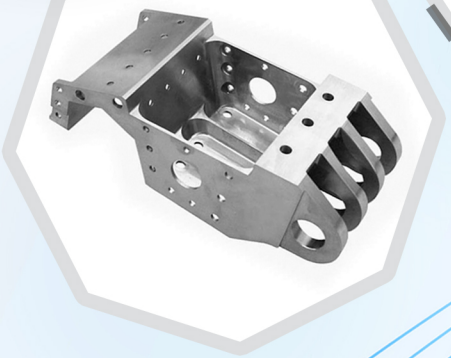

SAMPLE MACHINING PARTS

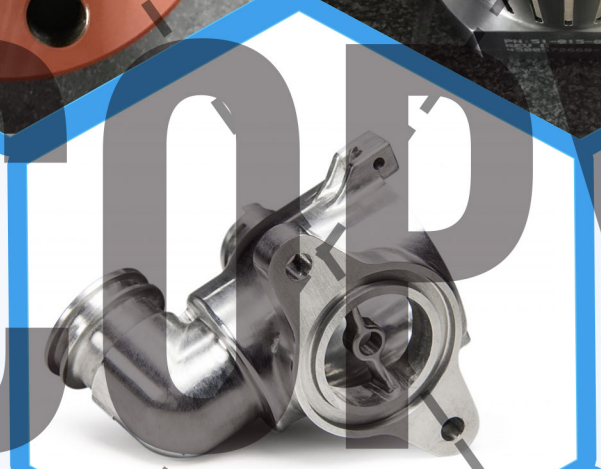

COPY

SAMPLE MACHINING PARTS

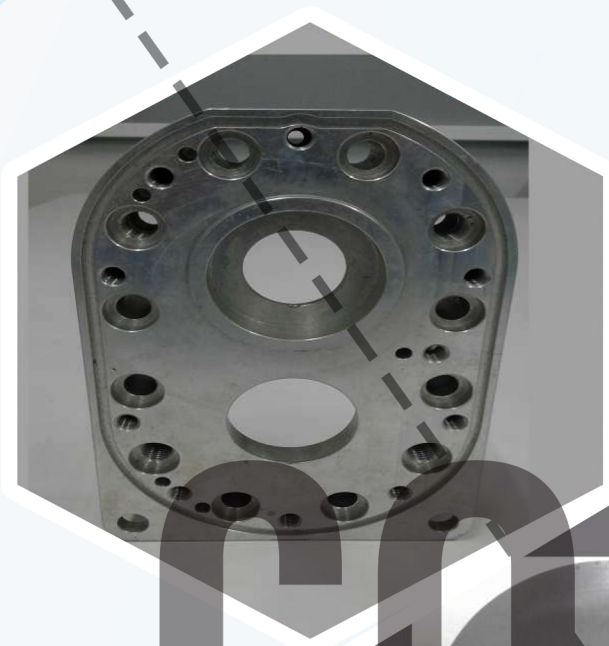

COPY

SAMPLE MACHINING PARTS

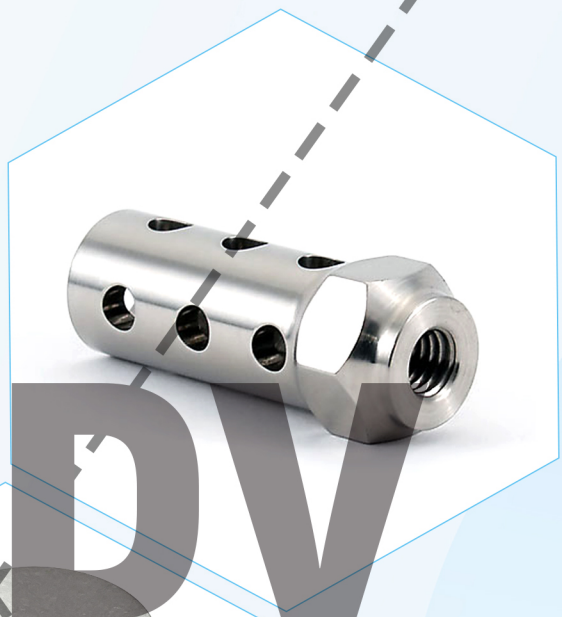

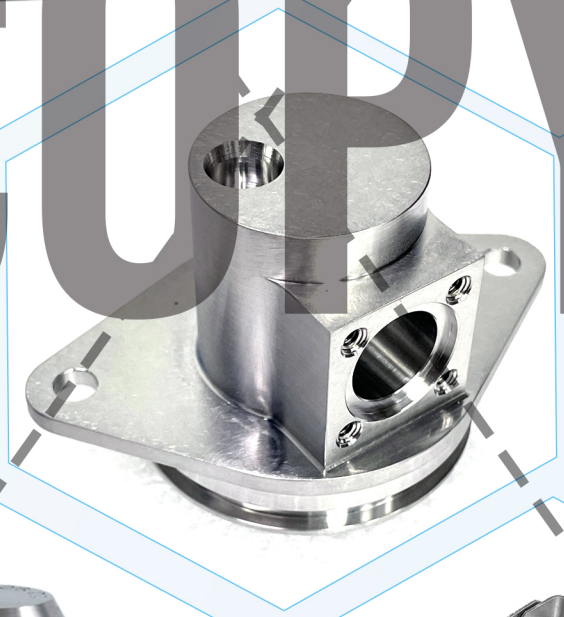

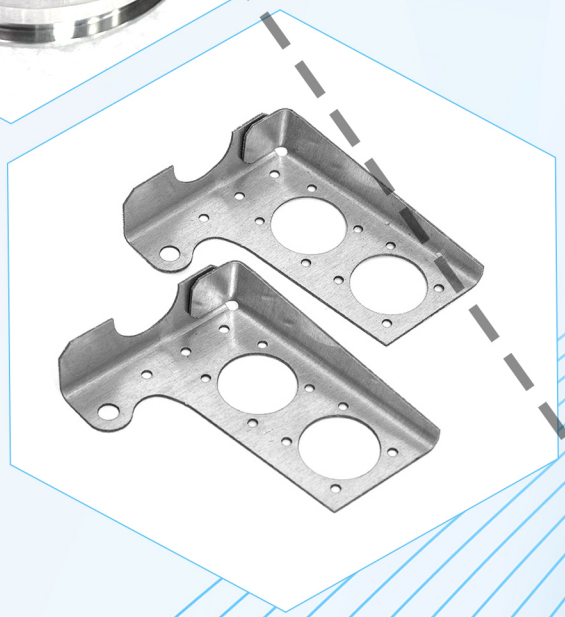

COPY

SKYTECH ENGINEERING (S) PTE LTD

Contact us:

Mr.Ravi shankar
+65 86942344
+65 90232240
sales@skytechsingapore.com
www.skytechsingapore.com

PLANT I
67L, Tuas South Ave 1,
Singapore-637517

INDONESIA
PT.PERFECT PRECISION ENGINEERING
Union Industrial Park Block D No:3c, Batu Ampar,
Batam, Indonesia
ptbatam@perfecttechgroup.com

Ms.Ella
+62 8117740777
+62 85836357902

INDIA
PERFECT TECH PRODUCTS
PPK Biz Park No:4/82
Survey No.117A,
Kundrathur, Chennai-600 069
admin@perfecttechgroup.com

Contact: **Mr.Ravikumar**
+91 9710010712
+91 9941958071

COPY